PROJECT 33: Design and Analysis of T Flip-Flop by using Cadence Virtuoso

A Comprehensive Study of Analog Circuits

By: Priya Chaudhary, Astitva Johri and
Bhavya Solanki

Chapters:

List of Figures……..…… 3

1. Introduction …….. 4
2. Brief Description…… 5
3. Circuit Design……. 6-7
   3.1 Schematic Design……... 6
   3.2 Simulation Setup...…….. 6
   3.3 Transient Response……. 6
4. Simulation Results…….. 8
5. Advantages and Disadvantages…….. 9
   5.1 Advantages……. 9
   5.2 Disadvantages……. 9
6. Conclusion…….. 10
7. Frequently Asked Questions (FAQs)…….. 11

LIST OF FIGURES

Figure 3.1 Circuit of NAND Gate ……..……...…... 7

Figure 3.2 Circuit of T Flip-Flop …….……..…... 7

Figure 4.1 Simulation Results of T Flip-Flop ……..... 8

1. INTRODUCTION

A **T (Toggle) Flip-Flop** is a sequential circuit that toggles its state on every clock pulse when the **T input is HIGH (1)** and holds its previous state when **T is LOW (0).** It is widely used in **counters, frequency dividers, and control systems** due to its simplicity and efficiency. The T Flip-Flop can be implemented using **NAND gates**, which are **universal gates**, making the design more optimized and hardware-efficient.

In this project, we use **Cadence Virtuoso** to design, simulate, and analyze the **NAND-based T Flip-Flop,** ensuring its correct functionality through transient analysis. This implementation helps in understanding **sequential circuit behavior, digital design methodologies, and performance evaluation in VLSI circuits.**

Truth Table of T Flip-Flop :-

Clock (CLK)	T (Input)	Q (Previous State)	Q (Next State)	Operation
↑ (Rising Edge)	0	0	0	No Change
↑ (Rising Edge)	0	1	1	No Change
↑ (Rising Edge)	1	0	1	Toggle
↑ (Rising Edge)	1	1	0	Toggle

2. BRIEF DESCRIPTION

Flip-Flops are **sequential logic circuits** used to store binary information (0 or 1). Unlike combinational circuits, flip-flops have **memory elements** that depend on both current inputs and past states. Among different types of flip-flops, the **T Flip-Flop (Toggle Flip-Flop)** is one of the most fundamental, widely used in **counters, frequency dividers, and digital registers.**

Working Principle of T Flip-Flop:-

A **T Flip-Flop** operates based on a **single input (T) and a clock (CLK):**

- When **T = 0**, the Flip-Flop retains its **previous state (Q remains unchanged).**
- When **T = 1**, the Flip-Flop **toggles (switches from 0 to 1 or 1 to 0)** on the **rising edge of the clock pulse.**

Mathematically, the next state of Q is given by: $Q_{next} = T \oplus Q_{previous}$

where $\oplus$ represents the XOR operation, meaning the output toggles when **T = 1**.

Applications of T Flip-Flop:-

- **Counters:** Used in **binary up/down counters** due to its toggling nature.
- **Frequency Divider:** A T Flip-Flop can divide the clock frequency by **a factor of 2** with each stage.
- **Shift Registers:** Helps in data movement across **sequential circuits.**
- **Control Circuits:** Used in **state machines and sequential logic controllers.**

3. CIRCUIT DESIGN

3.1 Schematic Design

1. Design NAND gate using CMOS transistors.
2. Connect six NAND gates to create the T Flip-Flop.
3. Label inputs and outputs (T, CLK, Q, $\bar{Q}$).
4. Run Design Rule Check (DRC) to ensure correctness.

3.2 Simulation Setup

1. Open **Cadence ADE-L (Analog Design Environment).**
2. Load the **schematic view of the T Flip-Flop.**
3. Select the **Spectre simulator** for circuit analysis.
4. Set a **pulse waveform** with a suitable period (e.g., 10ns).
5. Set **amplitude to VDD (e.g., 1.8V for CMOS technology).**
6. Apply a **square wave signal** with a frequency equal to **half of CLK** to observe toggling behavior.
7. Set **Transient Analysis** to observe signal changes over time.
8. Choose **simulation time** (e.g., 100ns) to capture multiple state changes.
9. Run the simulation and observe **Q and $\bar{Q}$ waveforms.**

3.3 Transient Response

- Expected Waveform Analysis

1. **When T = 0**, the output Q **retains its previous state.**
2. **When T = 1**, the output Q **toggles on each clock pulse.**
3. **$\bar{Q}$ is always the complement of Q.**

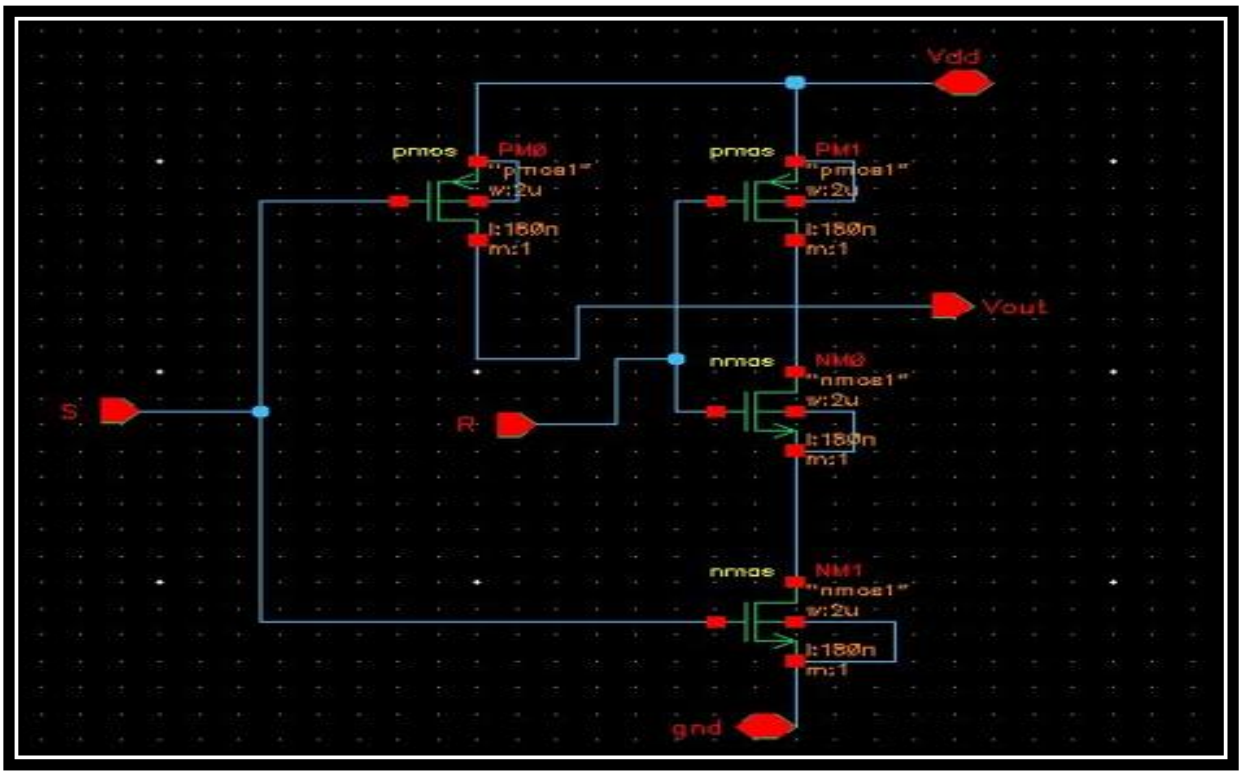

Figure 3.1 Circuit of NAND Gate

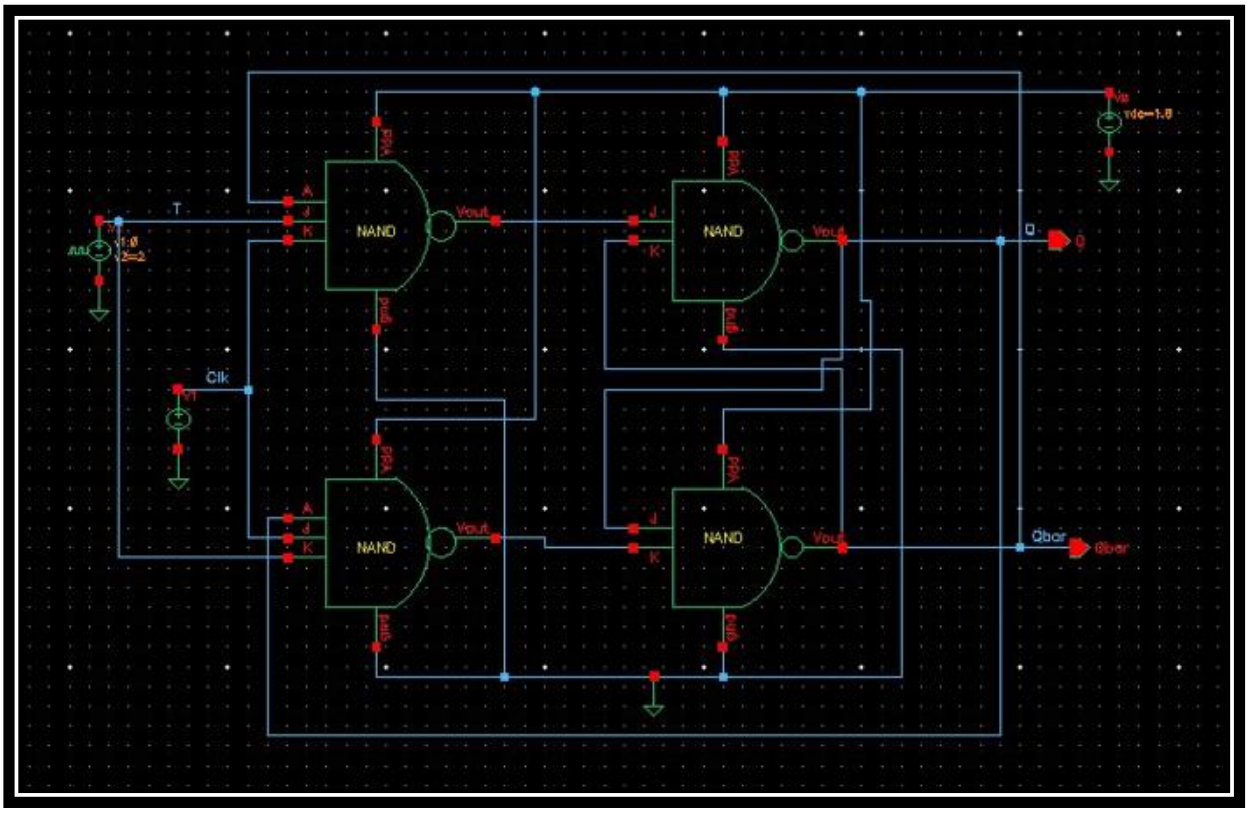

Figure 3.2 Circuit of T Flip-Flop

4. SIMULATION RESULTS

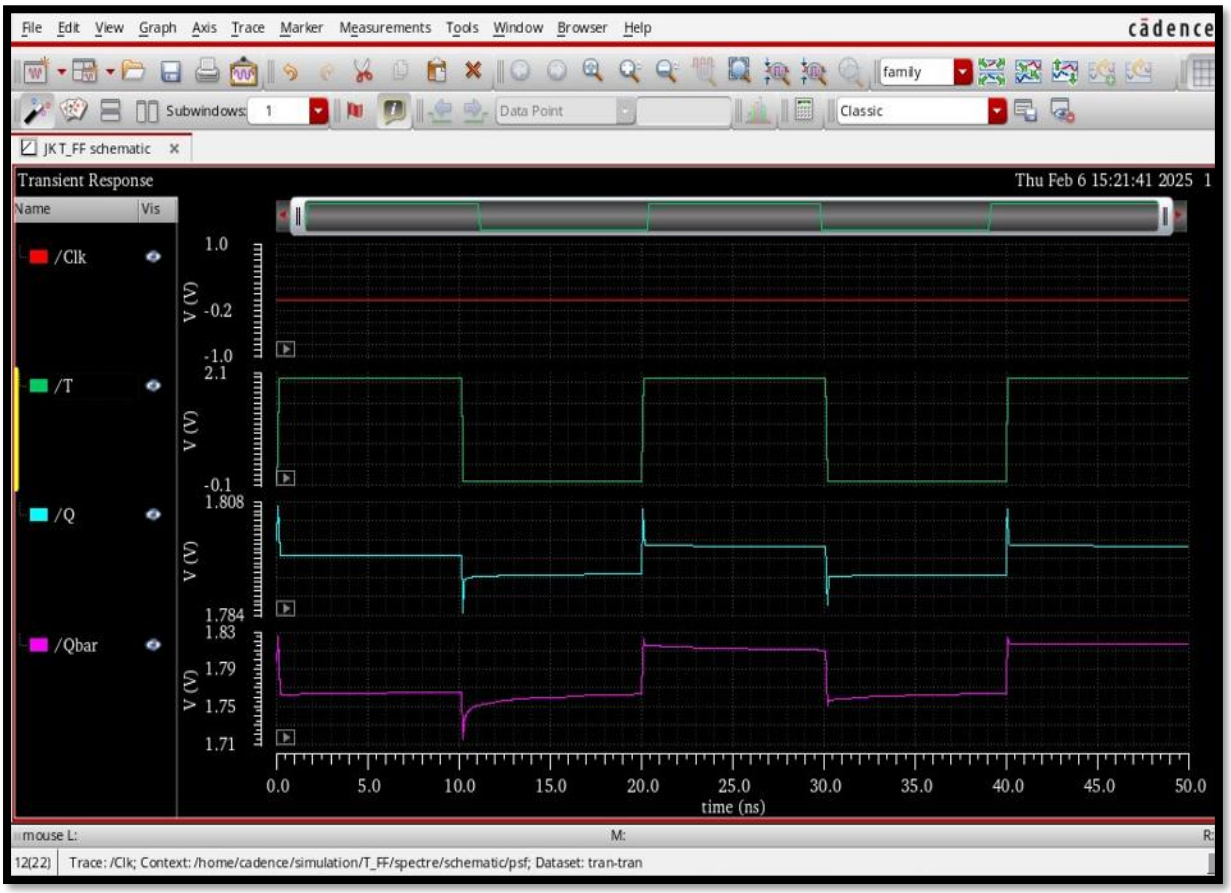

Figure 4.1: Simulation Results of T Flip-Flop

5. ADVANTAGES AND DISADVANTAGES

5.1 Advantages:-

1. **Simplifies Counters:** Used in binary counters and frequency dividers.
2. **Reduces Hardware Complexity:** Can be designed using minimum logic gates.
3. **Memory Efficient:** Requires only one control input.

5.2 Disadvantages:-

1. **Race Condition:** May suffer from glitches if not properly synchronized.
2. **Limited Applications:** Mainly used in counters, not suitable for complex memory storage.
3. **Propagation Delay:** Depends on NAND gate delay and circuit design.

6. CONCLUSION

In this project, we successfully designed and analyzed a **T Flip-Flop using NAND gates in Cadence Virtuoso**. The simulation results confirmed that the Flip-Flop correctly **toggles when T = 1** and retains its state when **T = 0**, demonstrating its expected behavior. This design is essential in **counters, frequency dividers, and digital control systems**, making it a fundamental component in sequential circuits.

Using **NAND gates** simplifies the hardware implementation while maintaining efficiency. However, factors such as **propagation delay and power consumption** should be considered for high-speed applications. Through this project, we gained hands-on experience in **schematic design, transient analysis, and performance evaluation** using Cadence Virtuoso.

Moving forward, optimization techniques like **CMOS layout design, power reduction strategies, and synchronization methods** can be explored to enhance performance. This project lays a strong foundation for **advanced sequential circuits**, such as shift registers and Finite State Machines (FSMs), essential in modern digital systems.

7. FREQUENTLY ASKED QUESTIONS (FAQs)

Q1. Why use NAND gates instead of other gates?

Answer: NAND gates are universal gates, meaning they can implement any logic function. Using NAND gates simplifies hardware design and optimization.

Q2. How does the T Flip-Flop differ from a JK Flip-Flop?

Answer: A JK Flip-Flop has two inputs (J & K), while a T Flip-Flop has only one (T). A T Flip-Flop is essentially a JK Flip-Flop with J = K = T.

Q3. What simulation results should I expect in Cadence Virtuoso?

Answer: The simulation should show that Q toggles when T = 1 and holds its state when T = 0, synchronized with the clock.

Q4. What is the role of the clock in the T Flip-Flop?

Answer: The clock ensures that the state changes occur only at defined intervals, preventing asynchronous errors.

Q5. How can I reduce power consumption in a T Flip-Flop circuit?

Answer: Power consumption can be reduced by using low-power CMOS technology for NAND gates, minimizing switching activity, and optimizing the clock signal to avoid unnecessary toggling when not required. Additionally, reducing supply voltage and using power gating techniques can further improve energy efficiency.